ADDRESS: N WALL RD AND HWY-26
PROJECT NAME: N WALL RD RECONSTRUCTION

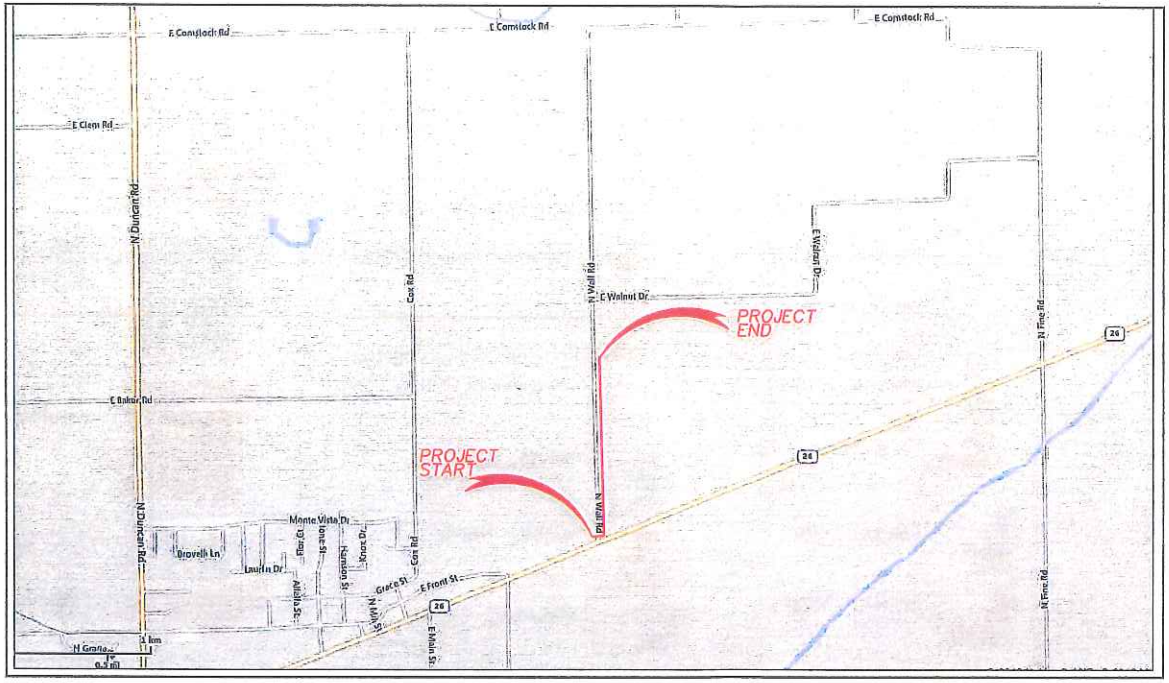

SITE LOCATION

CONTACTS

CONTACT INFO

SITE INDEX

1 - COVER SHEET/SITE LOCATION
2 - LEGEND
3 - GENERAL NOTES
4 - TYPICALS
5 - DRAWING-1
6 - DRAWING-2
7 - DRAWING-3
8 - DRAWING-4
9 - DRAWING-5

SCOPE OF WORK:

Project description:

RELOCATION OF EXISTING VERIZON BURIED FACILITIES TO REMOVE EXISTING STRUCTURAL CONFLICTS WITH THE COUNTY OF SAN JOAQUIN RECONSTRUCTION PROJECT OF N WALL RD

811 Know what's below. Call before you dig.

NO.	DATE	ENG DESIGN	DRAFTING	COMMENT
3				AS-BUILT
2				REVISION # 1
1				ORIGINAL

VERIZON TELECOM

TW TELECOM ENGINEER: JOHN-MITCHIKOFF
ENGINEERING FIRM: VERIZON
PROJECT NUMBER: 4626-7P0A9WY
LOCATION: WALLRD-HWY-26 LINDEN-CA
DRAWING NAME: Cal-Trans Permit.dwg

CONFIDENTIAL/PROPRIETARY

SHEET: 1 OF 9

LEGEND

LINETYPES

- UG FIBER – EXISTING
- UG FIBER – PROPOSED
- AERIAL FIBER – EXISTING
- AERIAL FIBER – PROPOSED
- STRAND – EXISTING
- STRAND – PROPOSED
- CONDUIT – EXISTING
- CONDUIT – PROPOSED
- INNERDUCT – EXISTING
- INNERDUCT – PROPOSED
- G — GAS
- W — WATER
- T — TELEPHONE
- E — ELECTRIC
- SEW — SANITARY SEWER (SEW)
- SD — STORM DRAIN
- X — FENCE
- TV — CABLE TV
- STM — STEAM
- OIL — OIL
- UNK — UNKNOWN UTILITY
- R/W — RIGHT OF WAY
- EOP — EDGE OF PAVEMENT

SYMBOL	DESCRIPTION
ASW	ASPHALT SIDEWALK
BIP	BLACK IRON PIPE
BSP	BLACK STEEL PIPE
CSW	CONCRETE SIDEWALK
EOP	EDGE OF PAVEMENT
EOTW	EDGE OF TRAVEL WAY
FOC	FACE OF CURB
HDPE	HIGH DENSITY POLYETHYLENE
HH	HANDHOLE
JB	JUNCTION BOX
MH	MANHOLE
MP	MILE POST
O/S	OFFSET
PVC	POLY VINYL CHLORIDE
RGS	RIGID GALVANIZED STEEL CONDUIT
ROW	RIGHT OF WAY
STA.	STATION

- (R) RISER
- [T] TELEPHONE
- [P] POWER VAULT
- CATCH BASIN/INLET
- FIRE HYDRANT
- GROUND/BOND
- STREET LIGHT
- TREE
- CULVERT
- WING WALL
- BRIDGE
- (U) MISC. UTILITY
- (⊗) OWNER ID — UTILITY POLE – EXISTING
- VERIZON ID — POLE – PROPOSED
- HH– [HH] HANDHOLE OWNER — HANDHOLE – EXISTING
- HH- [HH] HANDHOLE VERIZON — HANDHOLE – PROPOSED
- MH– [MH] MANHOLE VERIZON — MANHOLE – EXISTING
- MH- [MH] MANHOLE VERIZON — MANHOLE – PROPOSED
- PB– [PB] PULLBOX VERIZON — PULLBOX – EXISTING
- PB- [PB] PULLBOX VERIZON — PULBOX – PROPOSED
- VAULT– [V] VAULT VERIZON — VAULT – EXISTING
- VAULT- [V] VAULT VERIZON — VAULT – PROPOSED
- 0' — AERIAL STORAGE – EXISTING
- 0' — AERIAL STORAGE – PROPOSED
- (0') — VAULT/BUILDING STORAGE – EXISTING
- (0') — VAULT/BUILDING STORAGE – PROPOSED
- POLE ANCHOR/DOWN GUY – EXISTING
- POLE ANCHOR/DOWN GUY – PROPOSED
- PROPOSED DOWN GUY ON EXISTING ANCHOR
- [FDP] NAME SIZE LOCATION — TERMINATION – EXISTING
- [FDP] NAME SIZE LOCATION — TERMINATION – PROPOSED
- BUILDING NAME STREET — BUILDING CALLOUT – PROPOSED
- MANUFACTURER NAME — SPLICE POINT – EXISTING
- MANUFACTURER NAME — SPLICE POINT – PROPOSED
- #F IN: 0 OUT: 0 — SEQUENTIAL CALLOUT
- #F IN: 0 TAIL: 0 — SEQUENTIAL IN TAIL CALLOUT
- #F TAIL: 0 OUT: 0 — SEQUENTIAL TAIL OUT CALLOUT

POLE NO	N/A
UTILITY1	0'-0"

POLE ATTACHMENT CALLOUT – EXISTING
USE DYNAMIC PULL DOWN TO SELECT
FROM 1 TO 6 ATTACHMENTS

POLE NO	N/A
UTILITY1	0'-0"

POLE ATTACHMENT CALLOUT – PROPOSED
USE DYNAMIC PULL DOWN TO SELECT
FROM 1 TO 6 ATTACHMENTS

(1) CABLE FIBERS: FIBERS
CABLE OWNER: TWTC
CABLE LENGTH: LENGTH
NOTES:

CABLE SPAN CALLOUT – EXISTING
FOR USE ON PAPER SPACE (SHOWN AT 50X)

(1) CABLE FIBERS: FIBERS
CABLE OWNER: TWTC
CABLE LENGTH: LENGTH
NOTES:

CABLE SPAN CALLOUT – PROPOSED
FOR USE ON PAPER SPACE (SHOWN AT 50X)

(1) CONDUIT OWNER: TWTC
CONDUIT LENGTH: LENGTH
CONDUIT QTY: CONDUITS
CONDUIT SIZE: SIZE
CONDUIT TYPE: TYPE
INNER DUCT QTY: INNERDUCTS
INNER DUCT SIZE: SIZE
INNER DUCT TYPE: TYPE
NOTES:

CONDUIT CALLOUT – EXISTING
FOR USE ON PAPER SPACE (SHOWN AT 50X)
WITH OR WITHOUT INNER DUCT INFO

(1) CONDUIT OWNER: TWTC
CONDUIT LENGTH: LENGTH
CONDUIT QTY: CONDUITS
CONDUIT SIZE: SIZE
CONDUIT TYPE: TYPE
INNER DUCT QTY: INNERDUCTS
INNER DUCT SIZE: SIZE
INNER DUCT TYPE: TYPE
NOTES:

CONDUIT CALLOUT – PROPOSED
FOR USE ON PAPER SPACE (SHOWN AT 50X)
WITH OR WITHOUT INNER DUCT INFO

(1) STRAND TYPE: TYPE
STRAND LENGTH: LENGTH
NOTES:

STRAND CALLOUT – EXISTING
FOR USE ON PAPER SPACE (SHOWN AT 50X)

(1) STRAND TYPE: TYPE
STRAND LENGTH: LENGTH
NOTES:

STRAND CALLOUT – PROPOSED
FOR USE ON PAPER SPACE (SHOWN AT 50X)

811 Know what's below. Call before you dig.

NO.	DATE	ENG DESIGN	DRAFTING	COMMENT
3				AS-BUILT
2				REVISION # 1
1				ORIGINAL

VERIZON TELECOM

TW TELECOM ENGINEER: JOHN-MITCHIKOFF
ENGINEERING FIRM: VERIZON
PROJECT NUMBER: 4826-7P0A9WY
LOCATION: WALLRD-HWY-26
LINDEN-CA
DRAWING NAME: Cal-Trans Permit.dwg

CONFIDENTIAL/PROPRIETARY

GENERAL NOTES

1. Contractor must obtain locates prior to disturbing the ground.
2. Contractor must have a copy of the approved permit from the appropriate agency on the jobsite at all times.
3. All cable will be placed at standard minimum depth. (standard is 48" deep unless otherwise directed by a telecom representative.)
4. Any landscaping will be replaced to equal or better than that which existed prior to work.
5. Project site will be properly secured prior to the end of each day.
6. All work is to be in accordance with all authorities having jurisdiction in the work zone.
7. Contractors are advised to contact Verizon telecom for any additional information or clarification concerning scope of work or the requirements necessary for project completion.
8. Contractor is responsible to field verify all dimensions, quantities and existing conditions prior to construction. If a significant change to the running line is needed, please contact your Verizon telecom representative before proceeding.
9. Before construction begins, contractor shall take appropriate precautions to avoid any potential obstructions prior to proceeding with work.
10. No construction on private property will commence until approval is given by the appropriate Verizon telecom employee and agency representative from the County of San Joaquin and or Cal-Trans.
11. Contractor shall not proceed with work until they have received a Purchase Order and have been directed to do so by an authorized Verizon telecom representative.
12. Contractor shall not exceed the Purchase Order value without authorization in writing from the appropriate Verizon telecom representative.
13. As-Builts will be required for each project including cable footage sequentials at every access point, slack loop, splice location, pole and termination point. Contractor should also provide notes of all changes in depths, running lines, mh/hh locations, and any other applicable notes to depict the work that took place. NOTE: All major changes need to be pre-approved by an authorized tw telecom employee prior to starting the work.
14. Verizon assumes no responsibility for existing locations (Horizontal or Vertical). The existing utilities shown on these drawings have been plotted from the best available information. It is however the responsibility of the contractor to field verify the locations of all utilities prior to commencement of any construction activities.

811 Know what's below. Call before you dig.

NO.	DATE	ENG DESIGN	DRAFTING	COMMENT
3				AS-BUILT
2				REVISION # 1
1				ORIGINAL

VERIZON TELECOM

TW TELECOM ENGINEER: JOHN-MITCHIKOFF
ENGINEERING FIRM: VERIZON
PROJECT NUMBER: 4626-7P0A9WY
LOCATION: WALLRD-HWY-26
LINDEN-CA
DRAWING NAME: Cal-Trans PermitLdwg

CONFIDENTIAL/PROPRIETARY

TYPICALS

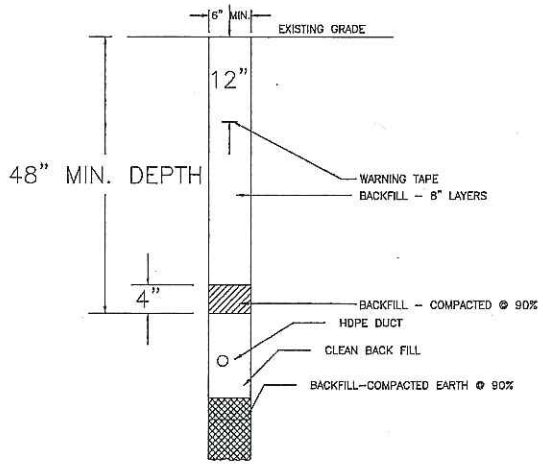

TYPICAL DETAIL – #TYPICALNUMBER
TRENCH IN SOIL (NON TRAFFIC AREAS)

TYPICAL DETAIL – #TYPICALNUMBER
DIRECTIONAL BORE
UNDER ROAD / HIGHWAY / INTERSTATE

CROSS SECTION WALL RD

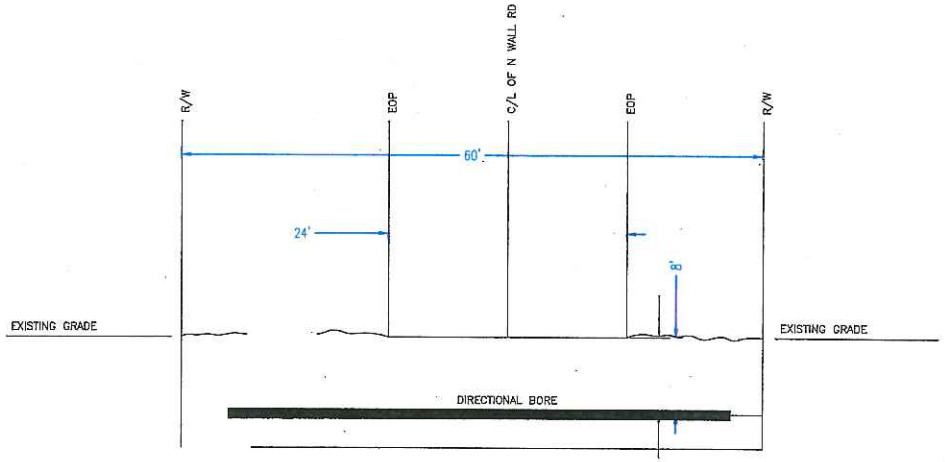

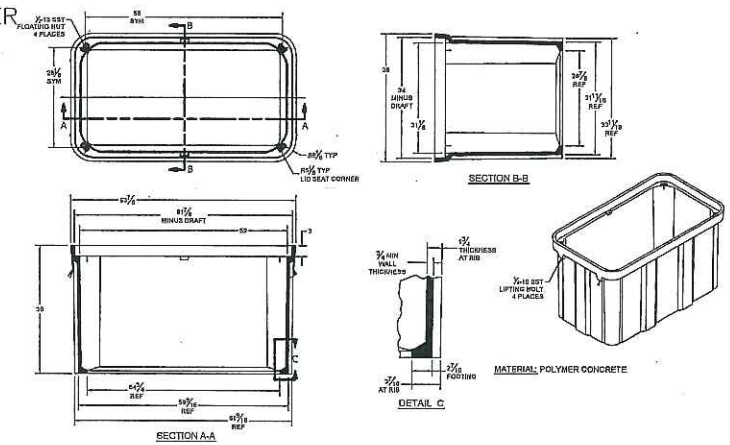

TYPICAL DETAIL – #3
UTILITY VAULT PRE-CAST 444LA OLDCASTLE – 25495141

Know what's below. Call before you dig.

NO.	DATE	ENG DESIGN	DRAFTING	COMMENT
3				AS-BUILT
2				REVISION # 1
1				ORIGINAL

VERIZON TELECOM

TW TELECOM ENGINEER: JOHN-MITCHIKOFF
ENGINEERING FIRM: VERIZON
PROJECT NUMBER: 4626-7P0A9WY
LOCATION: WALLRD-HWY-26
LINDEN-CA
DRAWING NAME: Cal-Trans Perm1.dwg

CONFIDENTIAL/PROPRIETARY

SHEET: 5 OF 9

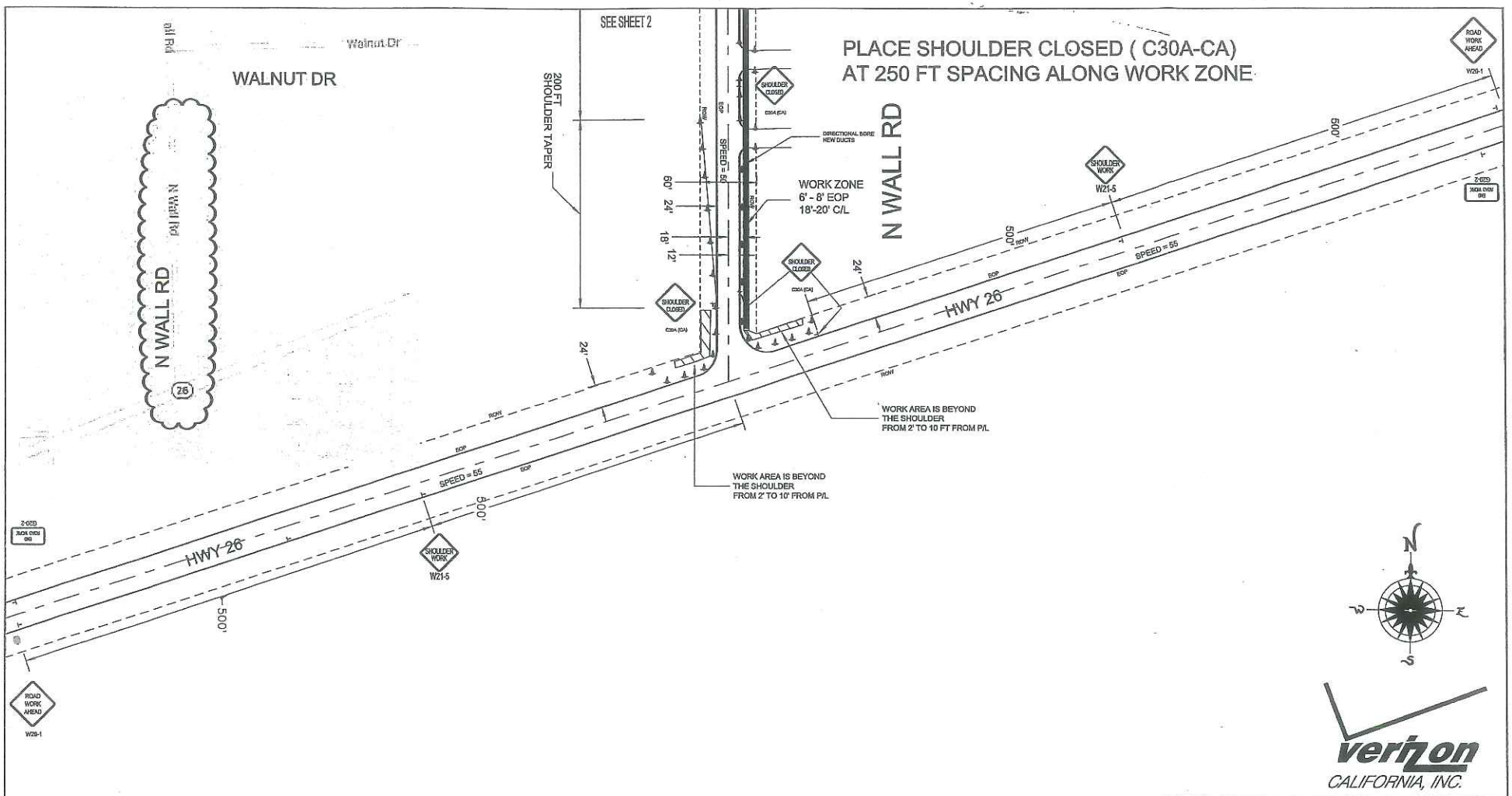

verizon
CALIFORNIA, INC.

VERIZON AREA W.O. # 4626-7P0A9WY	STATE CA		REGION CENTRAL
WIRE CENTER NAME:	W.C. #		EXCH CODE:
DRAWING:			RELATED W.O.
W.O. TITLE: TRAFFIC CONTROL WALL RD ..DIRECTIONAL BORE NEW DUCT			
LFA(s) Served: TWP:	RNG:	SEC:	TAX DST:
REV. DATE / REASON FOR CHANGE / REV # / ENGR / CODE / CAUSE			
DWG BY: DC	SCALE: 1"=100'	DATE: 2/27/15	1 OF 2

TRAFFIC DESIGN BY
DAVID CAIN
DAVID@CAINSERVICES.COM
619-465-9945

VERIZON WORK ORDER 4626-7P0A9WY
TRAFFIC CONTROL PLANS TO DIRECTIONAL
BORE NEW DUCTS ON SHOULDER OF
WALL RD NORTH AT 18 FT E/O CENTERLINE

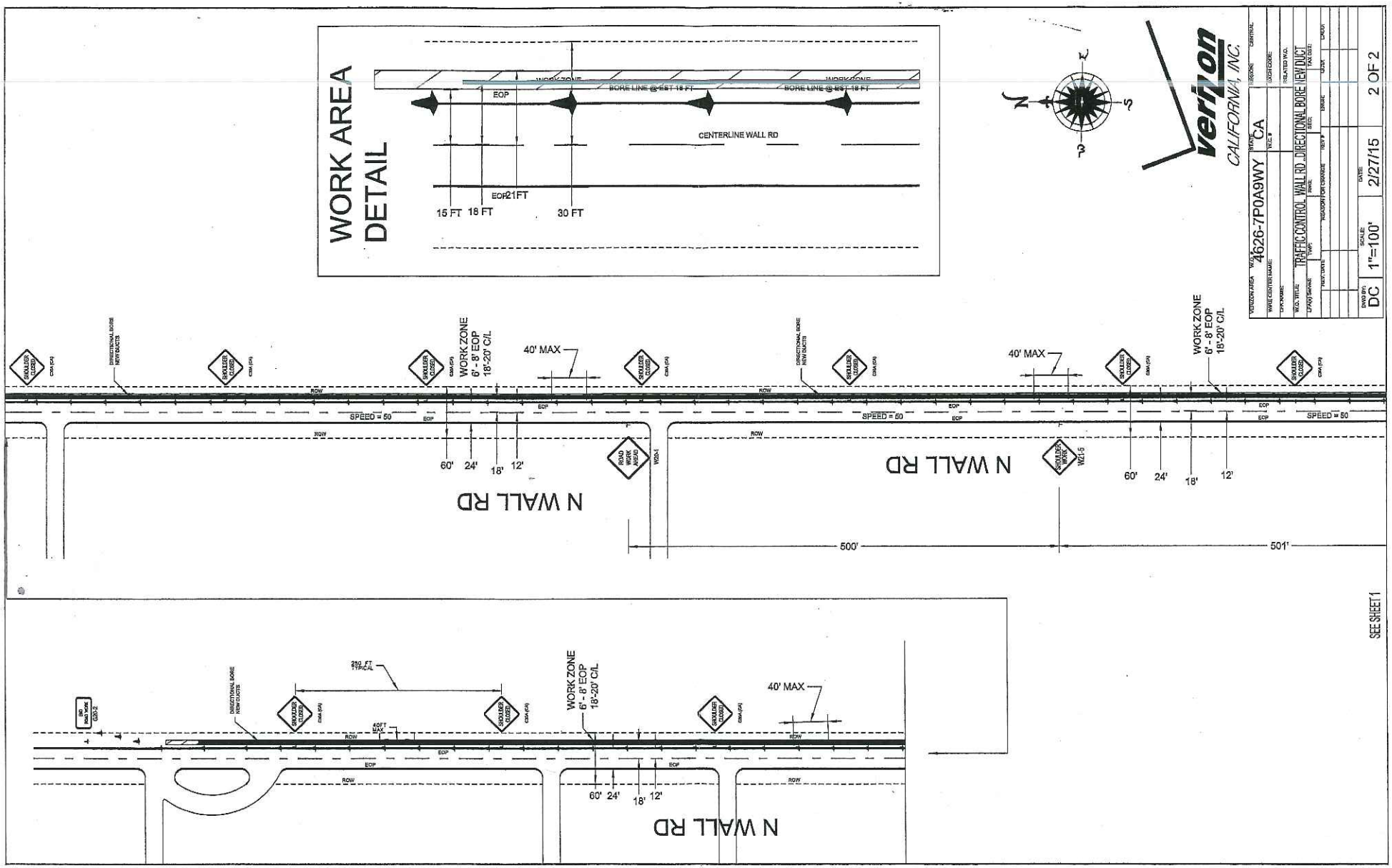
WORK AREA DETAIL
WORK ZONE
BORE LINE @EST 18 FT
EOP
CENTERLINE WALL RD
EOP21FT
15 FT
18 FT
30 FT
verizon
CALIFORNIA, INC.
VERIZON AREA
4626-7P0A9WY
STATE
CA
WARE CENTER NAME:
CPK NOMBRE:
W.O. TITLE:
TRAFFIC CONTROL WALL RD DIRECTIONAL BORE NEW DUCT
SCALE:
1"=100'
DATE:
2/27/15
DWG BY:
DC
2 OF 2
SHOULDER CLOSED
DIRECTIONAL BORE NEW DUCTS
WORK ZONE
6' - 8' EOP
18'-20' C/L
40' MAX
ROW
EOP
SPEED = 50
60'
24'
18'
12'
N WALL RD
ROAD WORK AHEAD
W20-1
SHOULDER WORK
W21-5
500'
501'
SEE SHEET 1
250 FT TYPICAL
40 FT MAX